castle link Quick Connect

Experienced modelers go to great pains to tie down their servo and throttle leads, and some find unplugging a Castle controller from the RX disrupts all their work. Many have asked for something like a Y connector that gives an open lead for easy Castle linking, but a traditional Y harness doesn't work when the other branch of the Y is connected to an RX, the signal line must be disconnected from the RX.

Castle Quick Connect does just that. It detects the presence of a Castle Link adapter on the free lead and switches the controller's signal line from the RX to the Castle Link. Easy as that.

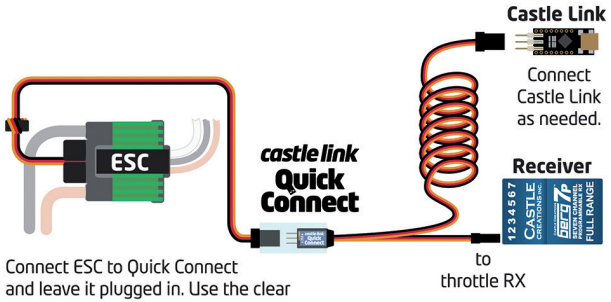

CC-010-0079-00

QUICK CONNECT

SERIAL LINK

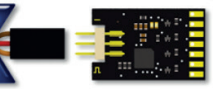

REAL TIME TELEMETRY FEEDBACK

castle LINK LIVE

The Serial Link device will allow customers to communicate with Castle ESCs through the Castle Link Live protocol, which allows access to real time telemetry feedback from the ESC. The device is capable of communicating through several serial protocols (e.g. RS232, I2C, SPI). The serial protocols allow the user to control the connected ESC's throttle level in real time while reading current operating conditions such as battery voltage and motor RPM. The device also has the ability to be controlled through an analog input, or can be used in a pass-through mode. The pass-through modes allow the Serial Link to receive the throttle signal from either an Analog or PPM input, and still allow an RS232 or I2C connection to pull real time data from the ESC.

CC-010-0121-00

SERIAL LINK

Example Applications

- Computer control with telemetry feedback of a Castle ESC
- Embedded control with telemetry feedback of a Castle ESC
- Wireless* control with telemetry feedback of a Castle ESC
- Analog control of a Castle ESC
- Pass through operation to an external data logging device
- Multiple ESC control with telemetry feedback for a Quad/Hex-copter using a single bus and multiple serial link devices

FIELD LINK PORTABLE PROGRAMMER FOR FLYING

CC-010-0063-01

FIELD LINK programmer for FLYING

FIELD LINK PORTABLE PROGRAMMER FOR DRIVING

CC-010-0063-00

FIELD LINK programmer for DRIVING

PROGRAMS YOUR CONTROLLERS WITHOUT A COMPUTER

Works as a standard Castle Link USB adapter with your computer.

Sometimes you need to make a change in the programming of a Castle controller and you just don't happen to have a laptop in your man purse. What to do? There's always the old stick programming method that we all love to hate. Yes it works, but... there has to be a better way. Now there is Field Link!

Field Link allows you to modify the most commonly used settings in your Castle controller all at the touch of a single button. No computer needed (mostly). Simply connect the Field Link to the throttle lead of the controller and power the pair as described below. Click the button to scroll through and change the indicated settings. Can't get any easier!

But wait!

Act now and we'll throw in Castle Link USB compatibility too! That's right, these cards are also Castle Links that give you access to the entire world of Castle tuning functionality.

Does it work without a computer or not?

Yes, mostly. The card is programmed to work with the latest controllers and software when it leaves the Castle workshop. It will work with all Castle Link compatible controllers running software released since 2007. Go to www.castlecreations.com for more details. There is always a chance that we will upgrade the controller firmware down the road and that upgrade may require that the Field Link be upgraded too. That is easily accomplished, but it will require a computer running the latest version of Castle Link that is always available for free on the Castle website. We'll also be happy to upgrade it for you if you drop it in the mail to us.