STAMPEDE 4X4 BRUSHLESS

Body Assembly

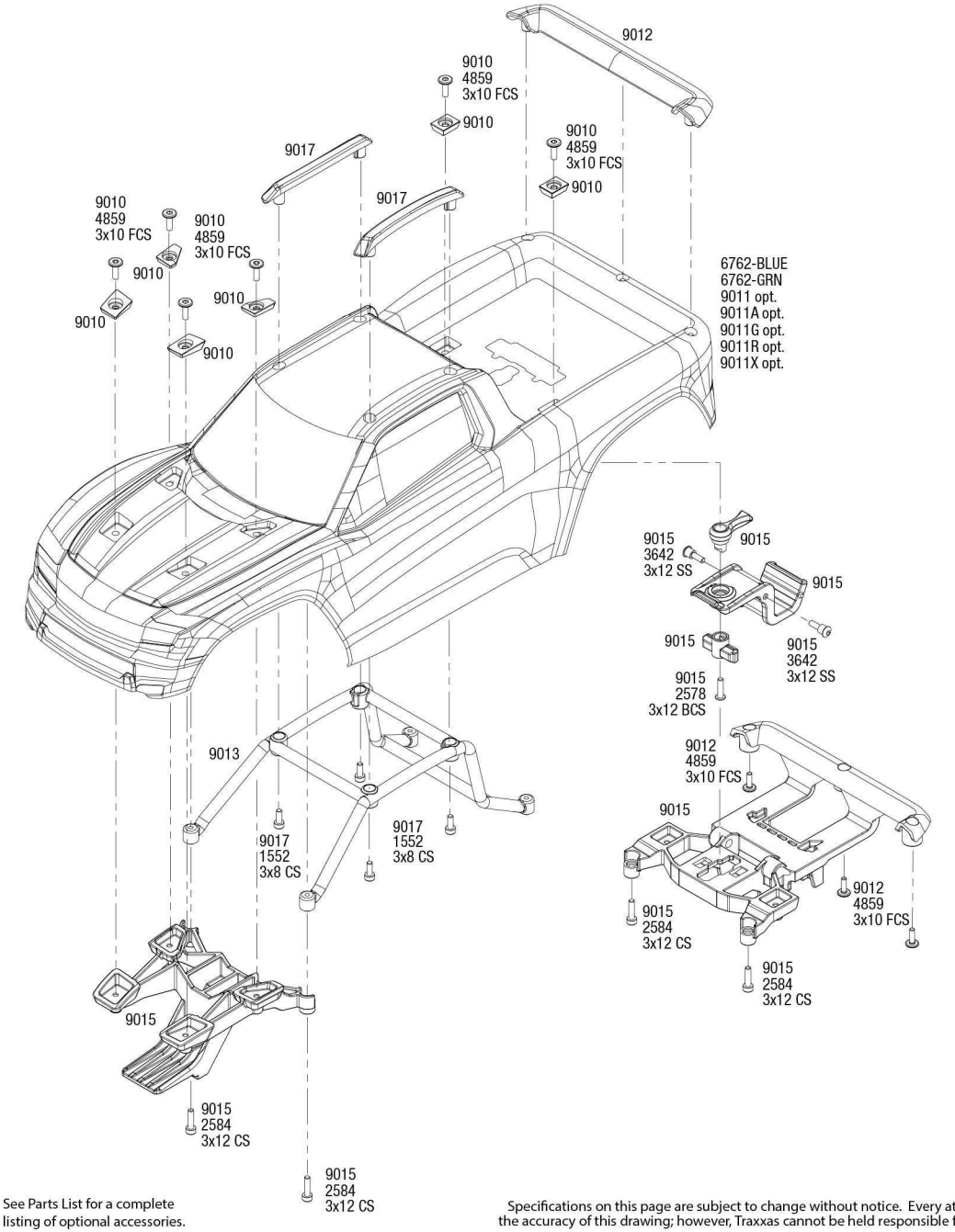

Completed Assembly (view from bottom)

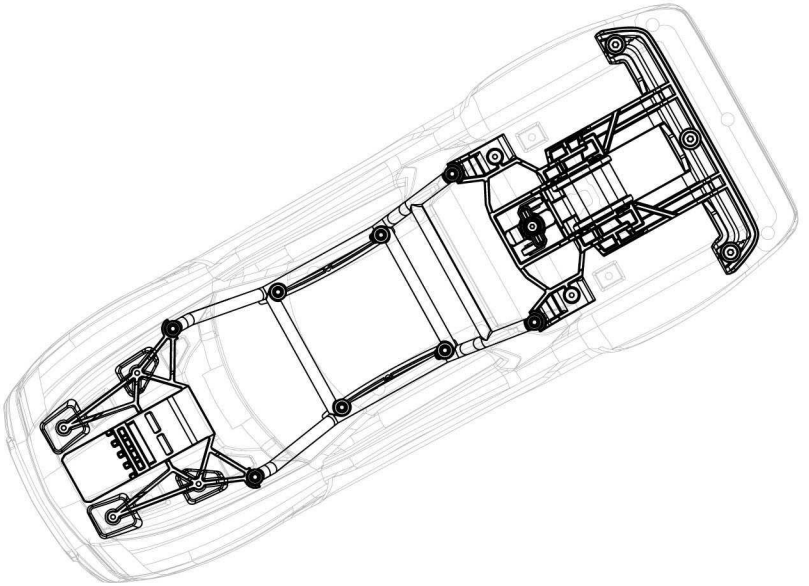

See Parts List for a complete listing of optional accessories.

Specifications on this page are subject to change without notice. Every attempt has been made to ensure the accuracy of this drawing; however, Traxxas cannot be held responsible for typographical or other errors.

REV 230817-R00

TRAXXAS

Chassis Assembly

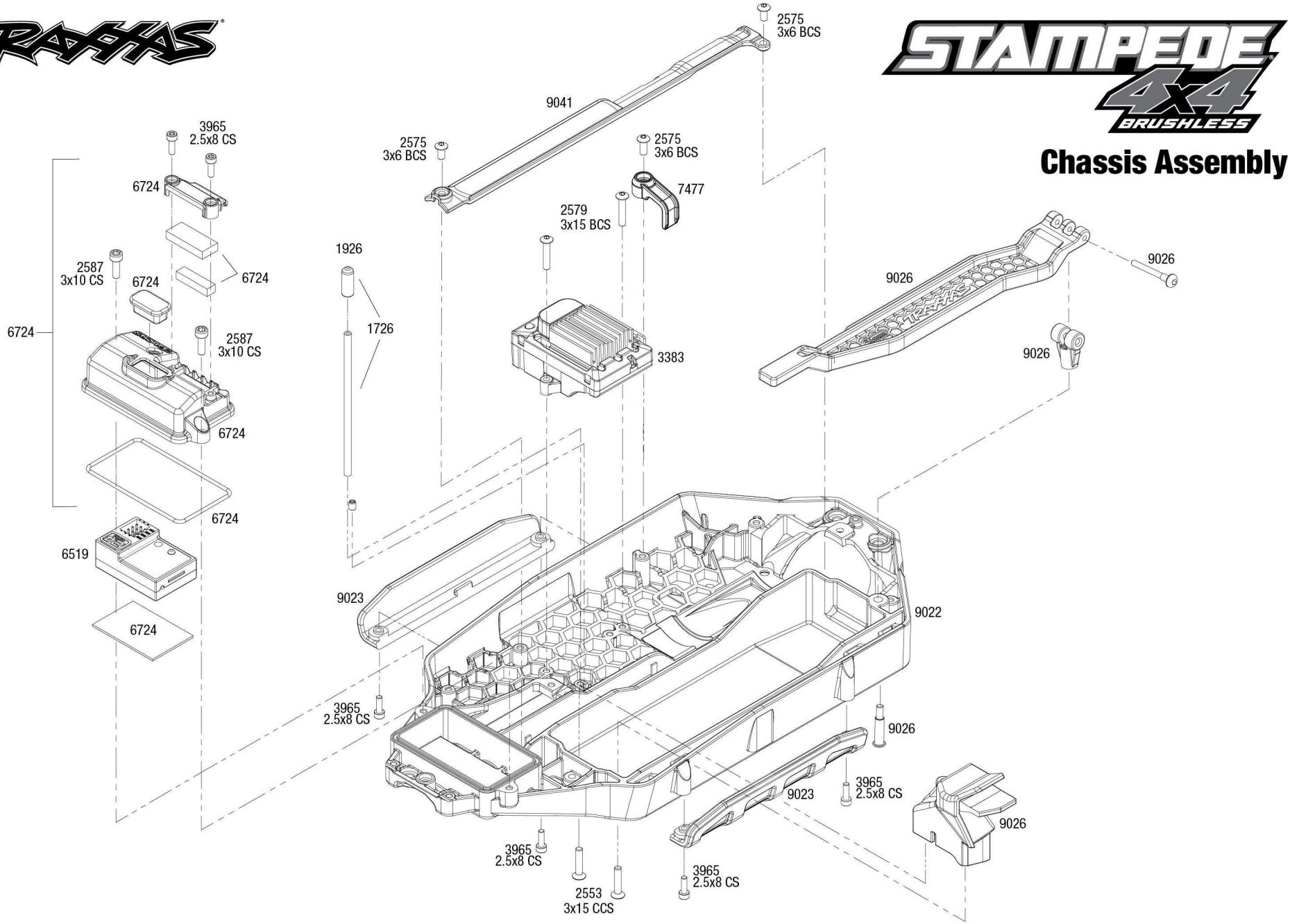

Specifications on this page are subject to change without notice. Every attempt has been made to ensure the accuracy of this drawing; however, Traxxas cannot be held responsible for typographical or other errors.

See Parts List for a complete listing of optional accessories.

REV 230817-R00

Driveshafts Assembly

Driveshafts

Front Driveshaft Assembly
Available fully assembled as part #9051

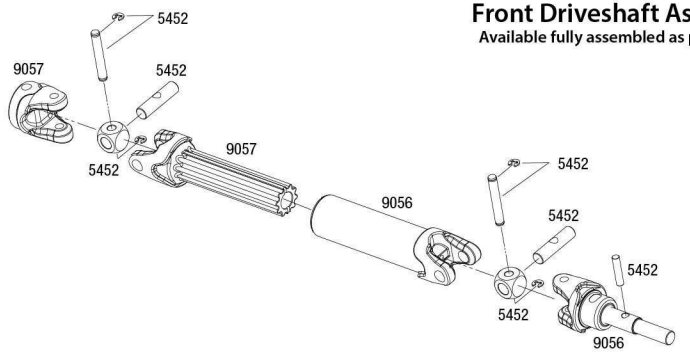

Rear Driveshaft Assembly
Available fully assembled as part #9052

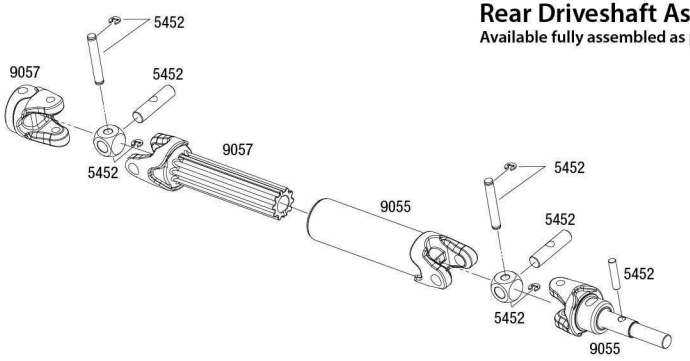

Modular Assembly

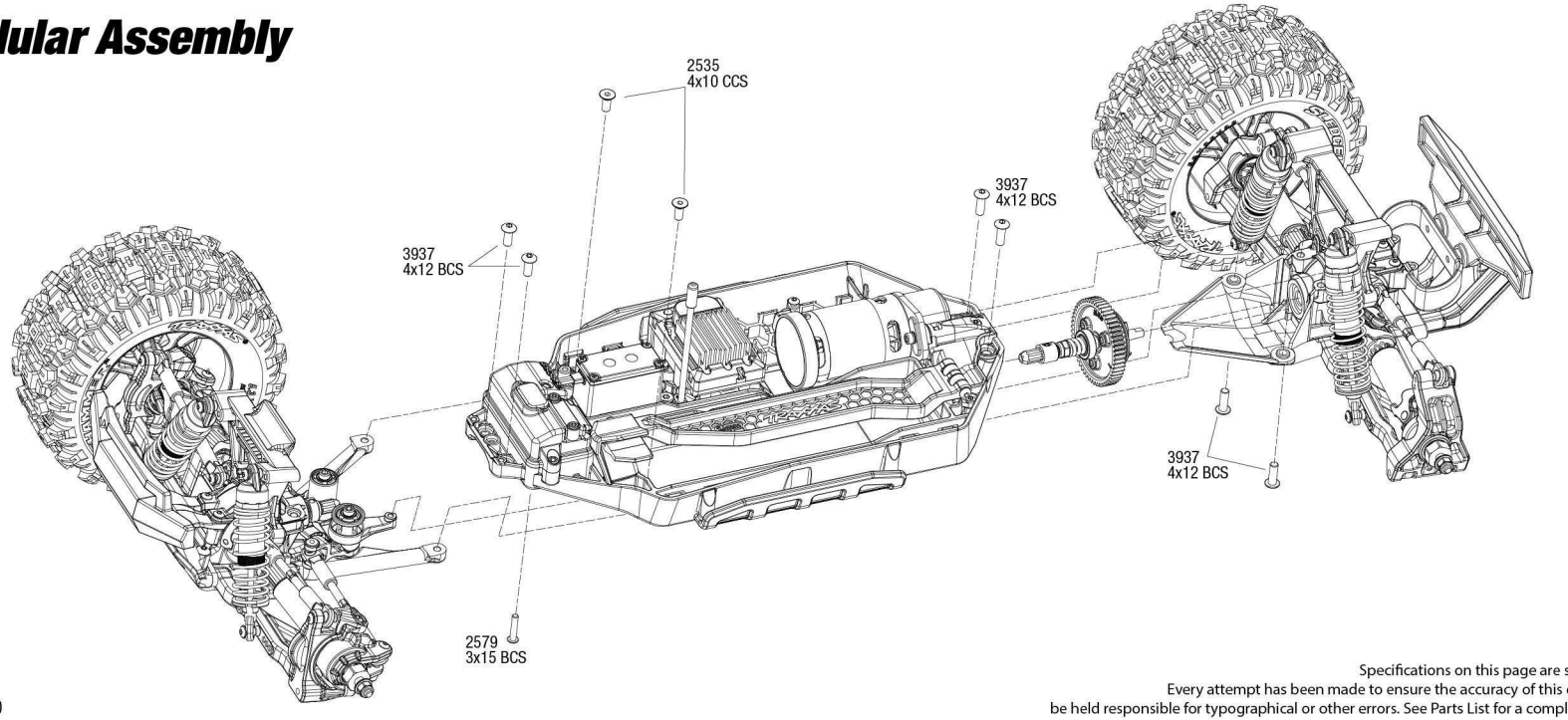

REV 230817-R00

Specifications on this page are subject to change without notice.
Every attempt has been made to ensure the accuracy of this drawing, however Traxxas cannot be held responsible for typographical or other errors. See Parts List for a complete listing of optional accessories.

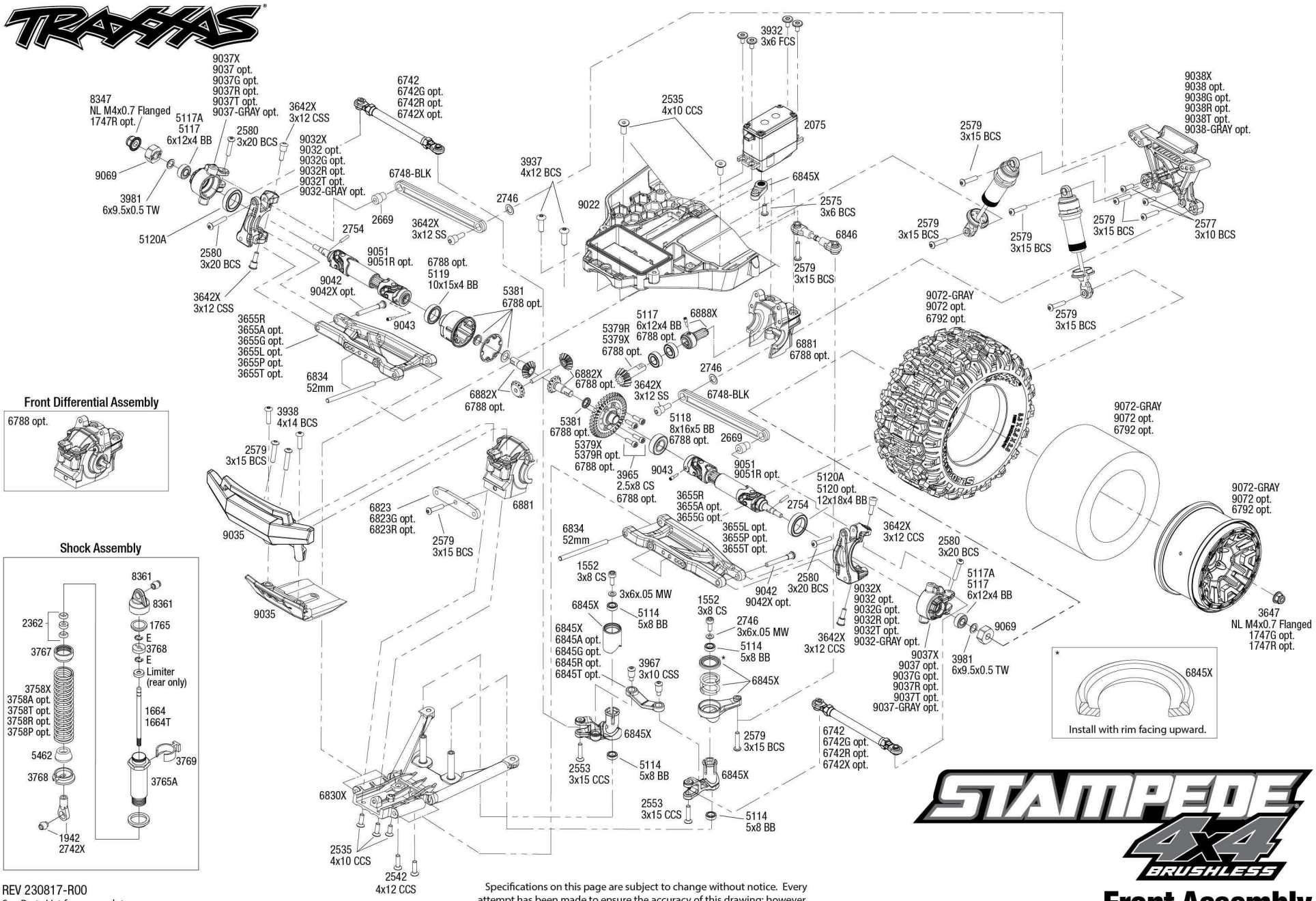

REV 230817-R00

See Parts List for a complete listing of optional accessories.

Specifications on this page are subject to change without notice. Every attempt has been made to ensure the accuracy of this drawing; however, Traxxas cannot be held responsible for typographical or other errors.

STAMPEDE 4X4 BRUSHLESS

Front Assembly

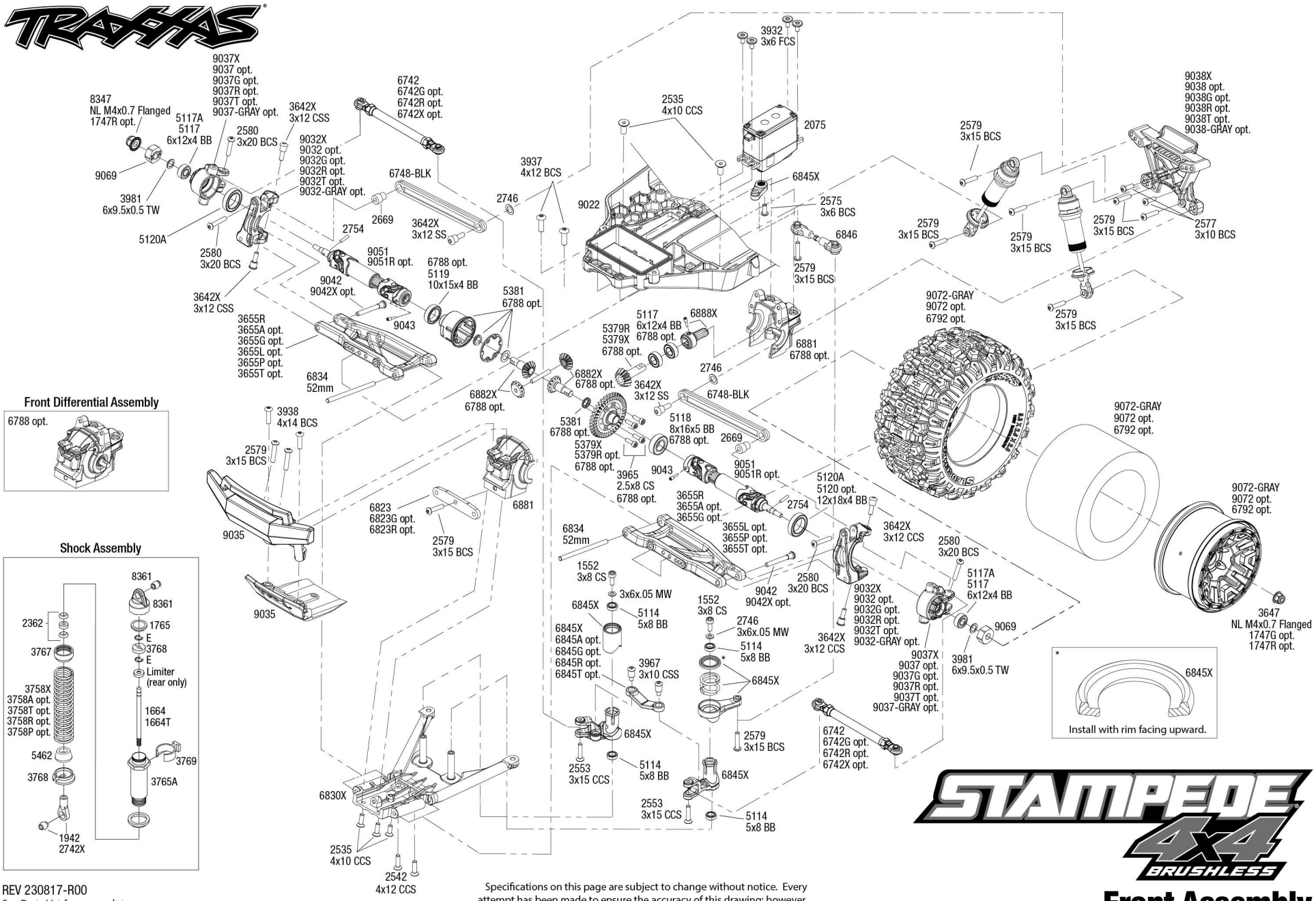

REV 230817-R00

See Parts List for a complete listing of optional accessories.

Specifications on this page are subject to change without notice. Every attempt has been made to ensure the accuracy of this drawing; however, Traxxas cannot be held responsible for typographical or other errors.

Chassis Assembly

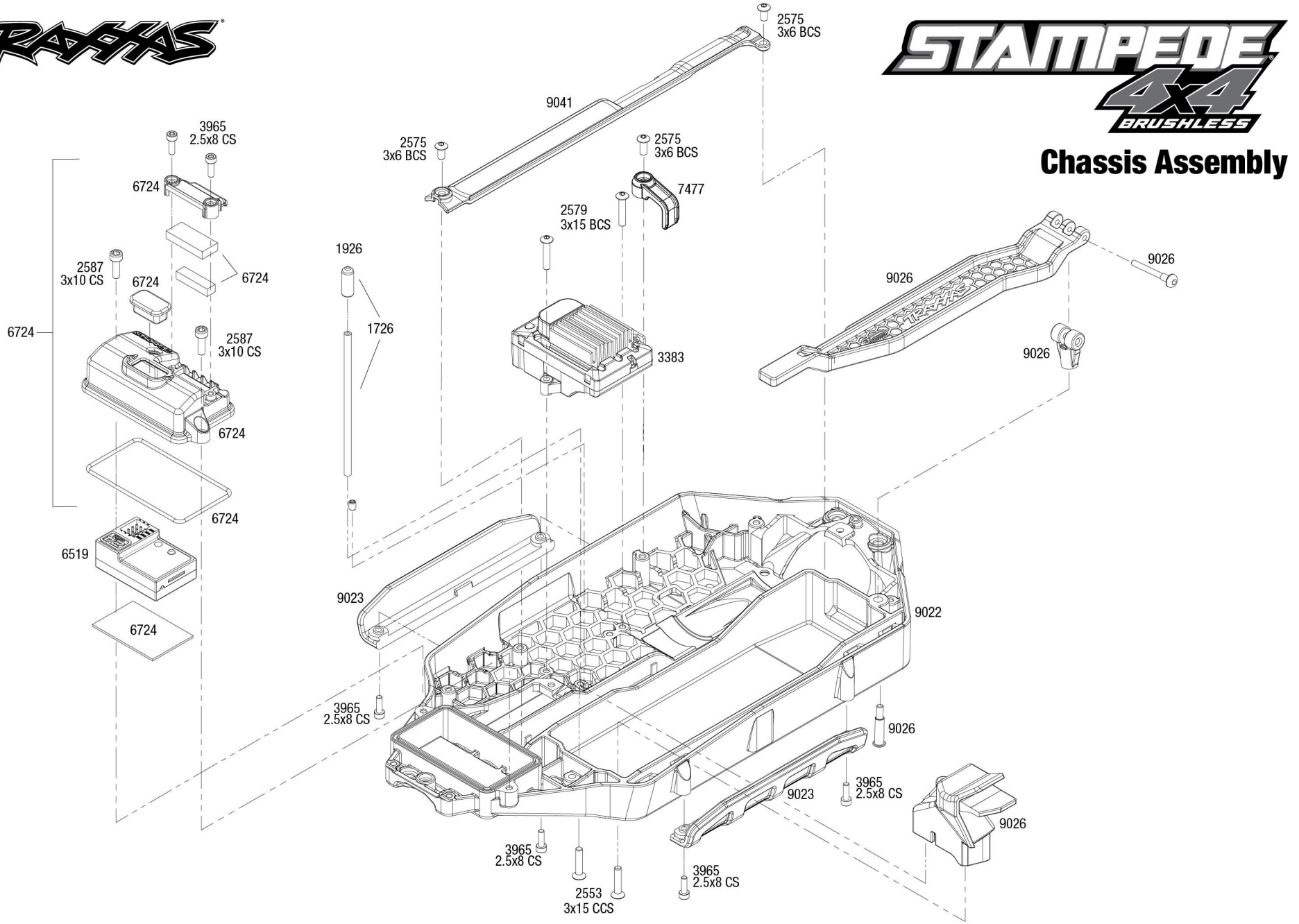

Specifications on this page are subject to change without notice. Every attempt has been made to ensure the accuracy of this drawing; however, Traxxas cannot be held responsible for typographical or other errors.

See Parts List for a complete listing of optional accessories.

REV 230817-R00

STAMPEDE 4X4 BRUSHLESS

Transmission Assembly

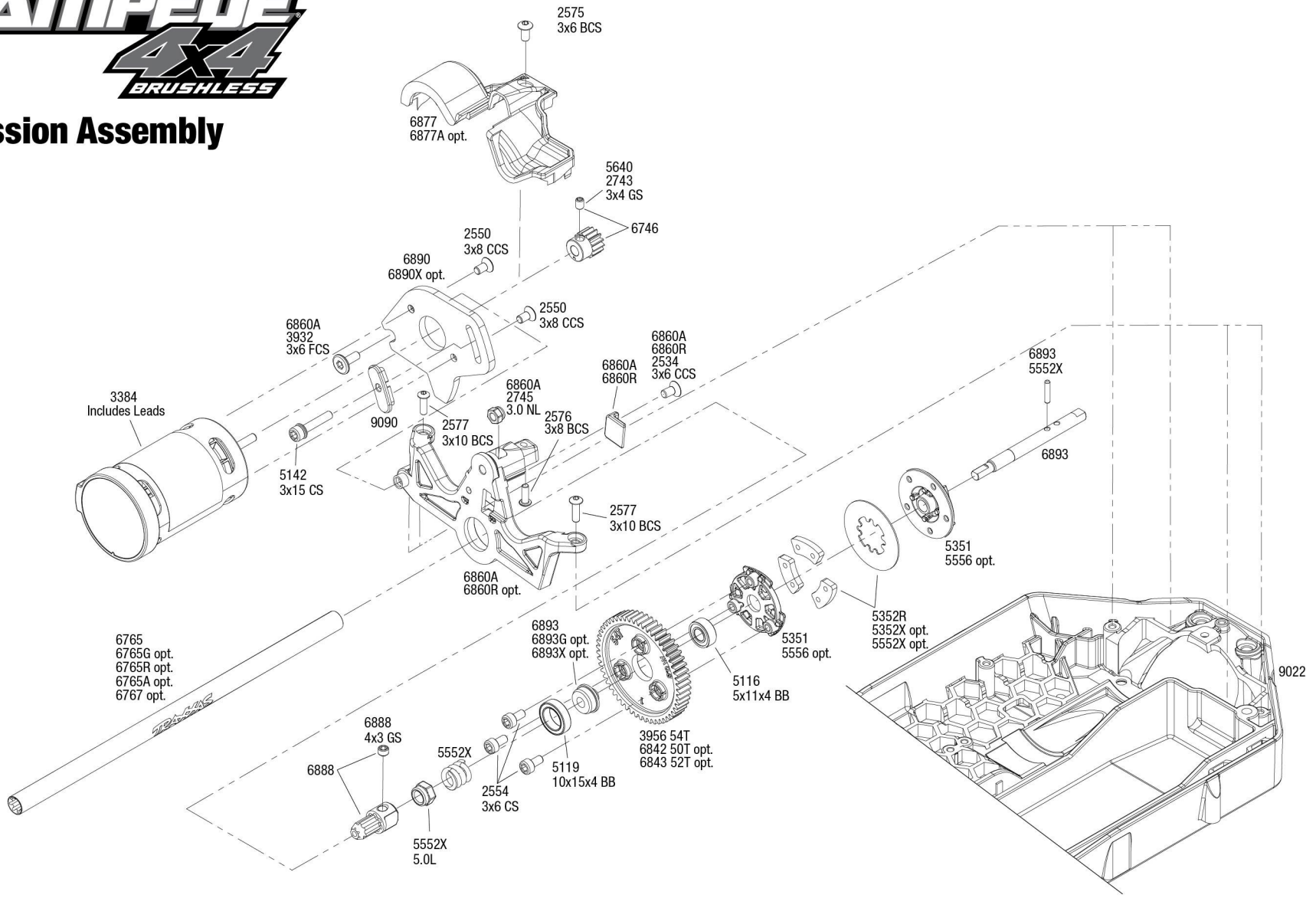

See Parts List for a complete listing of optional accessories.

REV 230817-R00

Specifications on this page are subject to change without notice. Every attempt has been made to ensure the accuracy of this drawing; however, Traxxas cannot be held responsible for typographical or other errors.

Driveshafts Assembly

Driveshafts

Front Driveshaft Assembly
Available fully assembled as part #9051

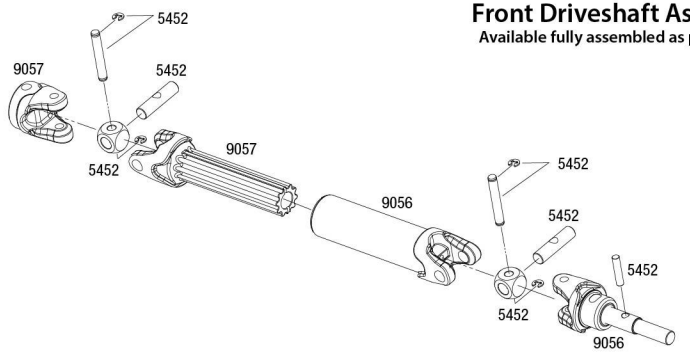

Rear Driveshaft Assembly
Available fully assembled as part #9052

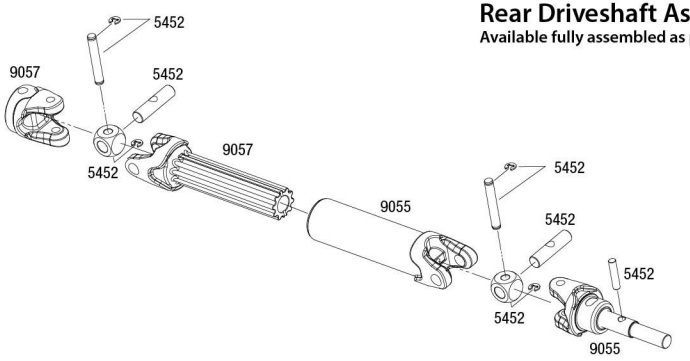

Modular Assembly

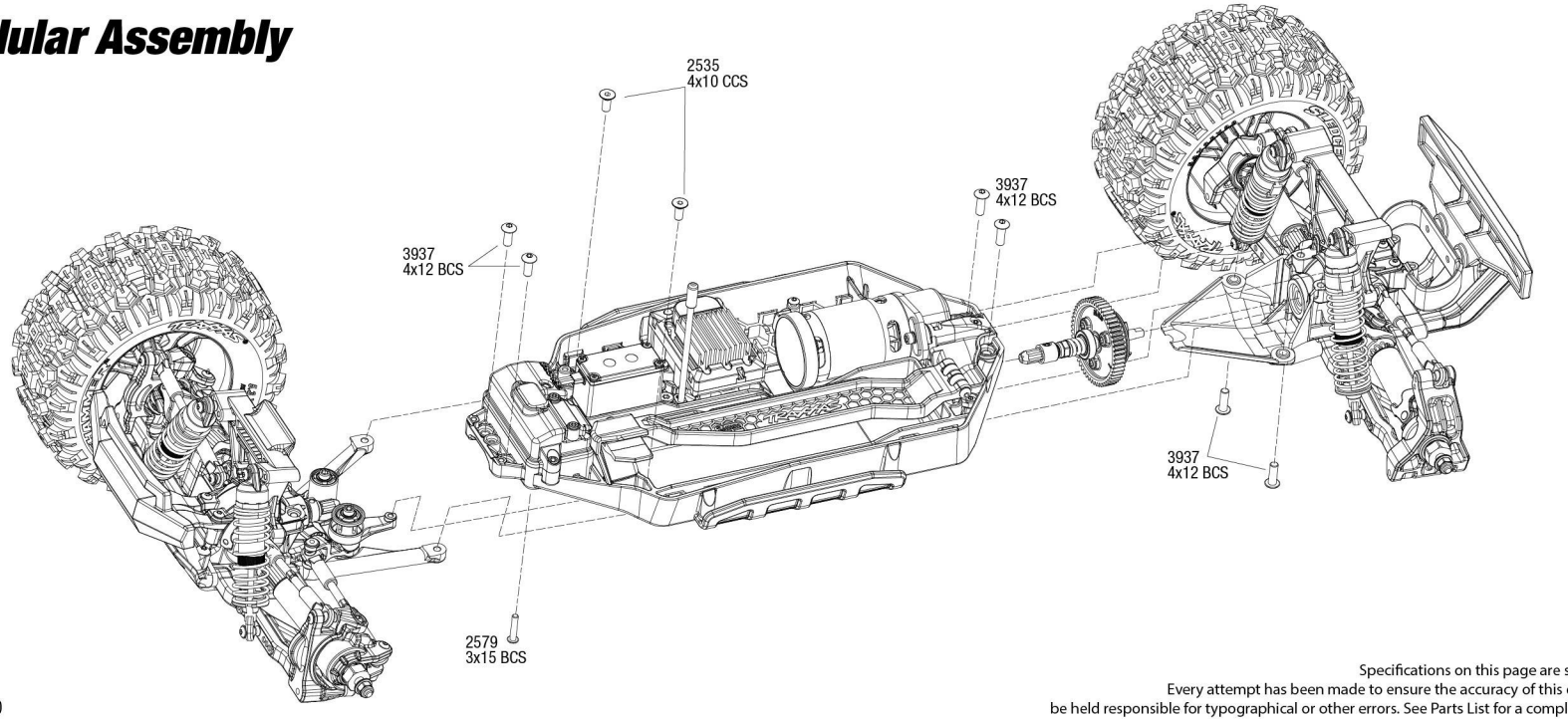

REV 230817-R00

Specifications on this page are subject to change without notice.
Every attempt has been made to ensure the accuracy of this drawing, however Traxxas cannot be held responsible for typographical or other errors. See Parts List for a complete listing of optional accessories.

STAMPEDE 4X4 BRUSHLESS

Rear Assembly

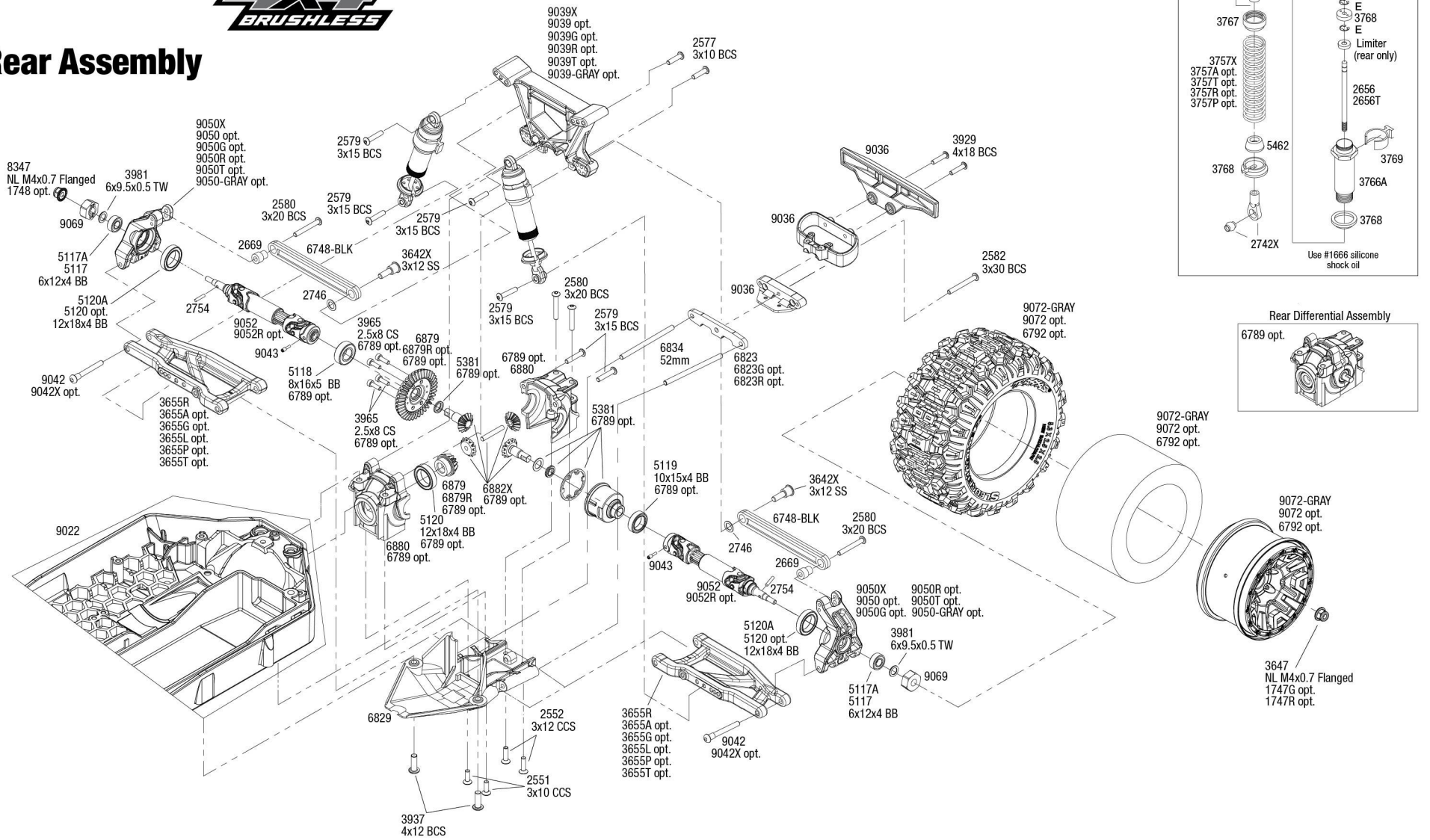

See Parts List for a complete listing of optional accessories.

REV 230817-R00

Specifications on this page are subject to change without notice. Every attempt has been made to ensure the accuracy of this drawing; however, Traxxas cannot be held responsible for typographical or other errors.